GROB

FLIGHT MANUAL G 102

ASTIR CS

77

The Manual belongs to ASTIR CS 77

Registration Number BGA ~~8244~~ 4722 Works Number 2244

Manufactured by: Burkhart Grob Flugzeugbau
8939 Mattsies
Flugplatz Mindelheim-Mattsies
West Germany

Owner: Border G.C. Milfield A/F
NORTHUMBERLAND

Published: February 1977

This manual should always be kept on board the glider

Contents page

Ownership particulars	1
List of Contents	2
Addenda	3
Flying Limitations	4
Placards	8
Key to Cockpit Symbols	9
Flying notes	11
Water Ballast	12
Dangerous	14
Accessories provided and Centre of Gravity positions	15
Measurements	16
Weights	19
Assembly	25
Control Checks	26
Maintenance	27
Inspection Procedures for increase of service time	29

1. Addenda

Current number	Page	Reference	Date	Signature
Addenda for ASTIR CS				
1	3,4,5, 7,8	changed	22. 5. 76	
2	3,4,5,6 14,16,17	changed	3. 1. 77	
3	25a	new page	1. 6. 77	
4	20	new page	26. 7. 79	
5	3,28	changed	4. 5. 81	
6	2,3,29	changed and new page	30. 9. 81	
7	3,26a	Inspection of the airbrake locking lever	25.3.85	
Addenda for ASTIR CS 77 and ASTIR CS Jeans				
1	4,5,7,8. 9,11,12 13,19,26	Remarks for retractable gear and waterballast deleted for ASTIR CS Jeans	1. 6. 77	
2	25a,	new page	1. 6. 77	
3	25	changed	1. 8. 77	
4	20	new page	26. 7. 79	
5	3,28	changed	4. 5. 81	
6	2,3,29	changed an new page	30. 9. 81	
7	3,26a	Inspection of the airbrake locking lever	25.3.85	

25.03.1985 (TM 306-26)

AD D-2004-168 Complied with 23-05-04.

Flying Limitations

Airspeed Limits (I.A.S.)

	km/h	mph	kts
Never exceed (V_{NE})	250	155	135
In rough air (V_B)	250	155	135
Manoeuvering (V_A)	170	105	92
On aerotow (V_T)	170	105	92
On winch tow (V_W)	120	74	64
Airbrakes	250	155	135
Gear extended	250	155	135

A.S.I. Colour Code

33 – 92 kts – Green Border – 60–170 km/h
92 – 135 kts – Yellow Border – 170–250 km/h
At 135 kts — Red Strip – bei 250 km/h

Weights		lbs	kp
Empty Weight	circa	594	270
Maximum permitted weight			
without water-ballast		836	380
with water-ballast		990	450
Maximum permitted weight of non-supporting ports		528	240

Weak Link on Winch cable

Maximum Load	1100	500

Cloud Flying and simple Aerobatics

Permitted if water-ballast is not being carried

See pages 12 – 14

Classification Group

Standard Class (German N)

Centre of Gravity positions

Levelling means	with a 1000:40 Incidence Board set up horizontal on the top of the rear fuselage.
Datum Line (D. L.)	Front edge of wing at root
Maximum forward position of C. of G.	310 mm behind D. L. (12,20 in)
Maximum rearward position	480 mm behind D. L. (18,90 in)

Loading Limitations ASTIR CS 77

Empty weight of glider and maximum cockpit load, see page 7.

Minimum cockpit load: 154 lbs (70 kp)

The permissible all up weight must NEVER be exceeded.

Maximum all up weight

without water-ballast	836 lbs	(380 kp)
with water-ballast	990 lbs	(450 kp)

The weight of water-ballast is dependent on the cockpit weight (Pilot with parachute and luggage). See page 7.

Weight deficiencies should be corrected by securing or removing some ballast in the seat.

The C. of G. of the pilot with a parachute on lies 485 mm in front of the Datum Line. 19"

Record of weight alterations and re-weighing

ASTIR CS 77 Works Number:

Date of weight alteration: Re-weighing by:	Liste of accessories (Date):	Empty Weight (lbs):	Empty Weight C. of G. position behind D. L. (mm):	Maximum Cockpit Weight (lbs):

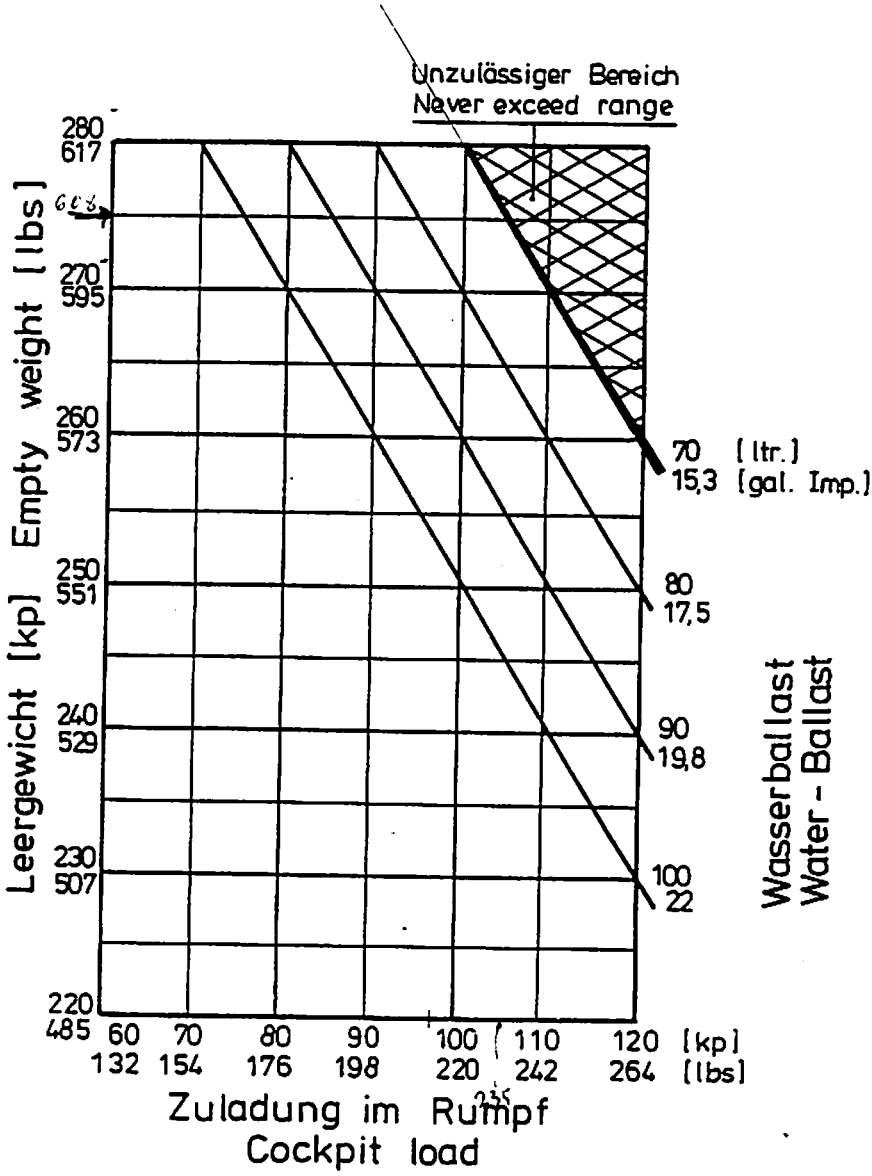
Unzulässiger Bereich
Never exceed range
Leergewicht [kp] Empty weight [lbs]
280
617
270
595
260
573
250
551
240
529
230
507
220
485
60
132
70
154
80
176
90
198
100
220
110
242
120
264
[kp]
[lbs]
Zuladung im Rumpf
Cockpit load
70 [ltr.]
15,3 [gal. Imp.]
80
17,5
90
19,8
100
22
Wasserballast
Water - Ballast

Placards to be displayed in cockpit:

Maximum weight	kp	lbs
without water ballast:	380	836
with water ballast:	450	990

Airspeed limits	km/h	m.p.h.	knots
Never exceed	250	155	135
In rough air	250	155	135
Manoeuvering	170	105	92
On aerotow	170	105	92
On winch tow	120	74	64
Airbrakes	250	155	135
Gear extended	250	155	135

Payload (pilot and parachute)
The maximum weight must not be exceeded.

Minimum payload: 70 kp, 154 lbs.
Less weight must be compensated with ballast in the seat.

Placards to be displayed near undercarriage:

Weak links for towing
500 kp, 1100 lbs. max.
Tire: 2,5 Atm., 36 psi

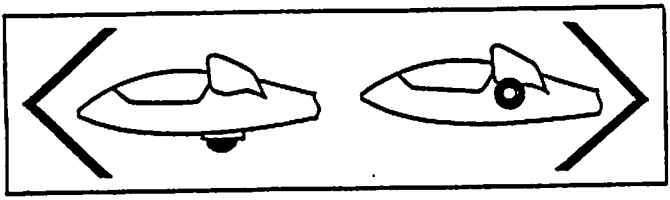

DOWN Under-carriage UP
Handle moves in slot on right of cockpit

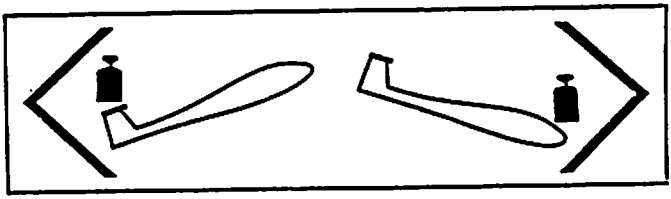

Trimmer
On left of cockpit.
GREEN lever.

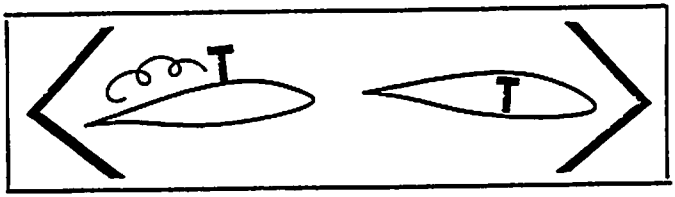

Air-brakes
On the left-hand side of the cockpit.
BLUE handle.

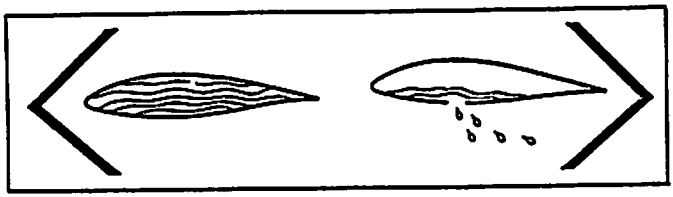

Water-ballast Jettison
On the right of the cockpit.
WHITE lever.

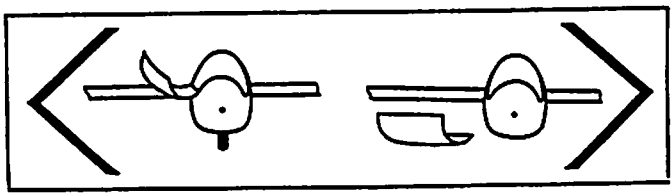

Canopy
Round RED knobs
Left of canopy-fram
OPEN.
Right of canopy-frame JETTISON

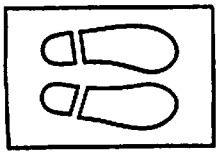

Pedal Adjustment
Small BLACK knob on the top of the instrument panel.
(right hand)

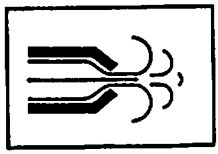

Air-vent
Small BLACK knob on the top of the instrument panel.
(left hand)

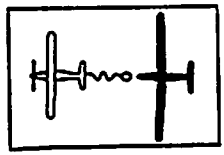

Cable Release
In front of the stick on the left.
YELLOW knob.

Graph of True v. Indicated Airspeed, showing the effect of Position Errors. When the A.S.I. is connected to the following pressure sources.

A.S.I. – Pitot head in tail fin static vents side of the Fuselage before the wing root.

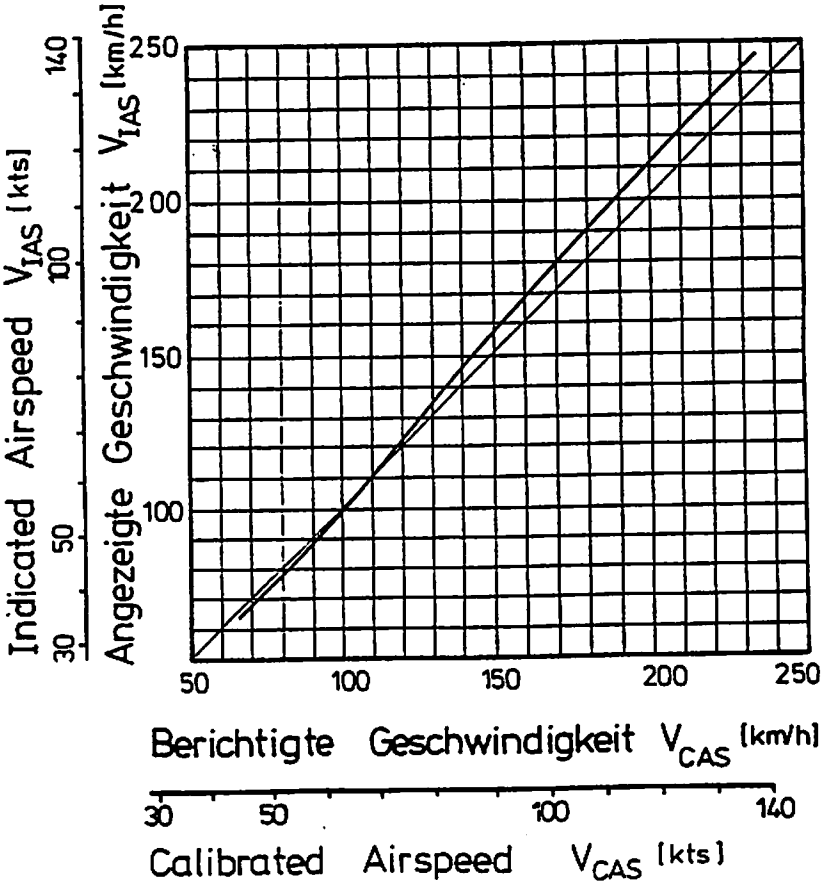

Notes on Flying the Glider

Winch/Auto-tow-Launch

Maximum permitted launch speed: 64 kts

The glider has a belly-hook in the undercarriage well in front of the wheel.

A cable launch presents no difficulties with any C. of G. positions or weight configurations. The glider has no tendency to balloon and is very stable on the launch. Up to a height of 300ft the nose should be held down if the launch is fast.

Aerotow

Maximum permitted towing speed: 92 kts

The glider's C. of G. position allows the areotow to be carried out using either the nose — or belly-hook. During the whole of the time on tow, the glider can be easily controlled with rudder and aileron, full movements of which can be used if necessary. Even in strong cross-winds the glider shows no tendency to wander around. At 32 kts the glider can be lifted off: with 37 – 40 kts indicated, the glider climbs on its own. The undercarriage can be retracted whilst still on tow. The yellow release knob is positioned on the left in front of the stick, and should be pulled fully back when releasing the tow-rope.

Weak Link in tow-rope

Maximum load: 1100 lbs

Rudder-pedal Adjustment

To adjust the rudder pedals, push lightly forward on them with the heels and disconnect the locking device by pulling the handle on the instrument panel. The pedals move towards the pilot by themselves: to adjust them forward you have to push them against the pressure of the springs with your heels. The pedals will lock themselves in the position required when the handle is released.

Canopy

The single-piece perspex canopy has a clear-vision panel and ventilation port, and is fitted an hinges. The handle for opening it is located on the left-hand side of the canopy surround: that for jettisoning it on the right-hand fuselage side. To jettison the canopy, pull both handles back and push it up and away with the left hand.

Retractable Undercarriage

The undercarriage control lever is located on the right of the cockpit. When retracted or lowered, the wheel should be locked in place by pushing the control lever in towards the fuselage side.

Air-brakes

The lever for the air-brakes is situated on the left-hand side of the cockpit. Before beginning a launch, check that the air-brakes are closed and locked. One should avoid trying to land with full brake out, since the effectiveness of the brakes means that the glider is descending fast.

Wheelbrake

The lever for the wheelbrake is located on the stick.

Trimmer

The built-in trimmer can be progressively adjusted. The control lever for it is positioned on the left-hand side of the cockpit behind the air-brake lever.

Trim range from 32 kts – 97 kts.

Flight with Water-ballast

The glider has the same all up weight as a standard 2 seater glider, when loaded with water-ballast and a full cockpit load. The slow flight and stalling characteristics of the fully loaded glider are a little different from one flown without water-ballast.

The stalling speed will be increased to 38 kts.

Also larger control movements will be necessary.

The glider will spin cleanly but will recover immediately spin recovery action is taken.

The pilot is advised to have extra height when slow flying or approaching to land while carrying water-ballast.

Use of Water-ballast

The water-ballast tanks are situated in the front part of the wings, from the root outwards. Each wing can hold 50 litres. The tanks are filled through an opening in the top surface of the wing. This is covered by a plug, which can be removed by screwing in a bolt. The water is drained off through an opening in the underside of the fuselage behind the wheel-box. To open the valves of the tanks, the control lever on the right-hand side of the cockpit should be pulled backwards. It takes about 3 minutes for the tanks to empty themselves.

Air from the tanks escapes through the overflow pipe that runs down to a point an the underside of the wing near the root. When flying with water-ballast the connecting-tape that covers the gap between fuselage and wings, should be folded back on the underside in the region of the spar, so that any excess water which may appear runs out rather than down into the fuselage.

During long flights at an air temperature of 0 ° C (32 ° F) the water-ballast must be jettisoned because there is danger of collapse of the ballast tanks.

When a field landing is to be made the water-ballast must be jettisoned.

The glider must not be parked over-night with water-ballast on board. If the glider has to be towed for a long way on the ground with water-ballast on board, the tanks should be emptied.

When de-rigging the water-ballast tanks will empty themselves through the wing root connecting pipes.

Stalling Characteristics

Warning of the stall occurs at a speed of 32-35 kts (depending on wing loading), when the top of the tailunit begins to shudder. If the stick is pulled back even further, the glider „mushes" but remains controllable, it being possible to make turns up to an angle of bank of 20° without the wing dropping away. If the stick is released the glider returns immediately to the normal flying attitude. If the stick is pulled back quickly, the nose will drop away but any tendency for a wing to fall can be controlled by the rudder.

Aerobatics

Permitted manoeuvres and speeds at which they should be initiated:

Loop	92 kts
Chandelle	92 kts
Steep turn	65 kts
Lazy eight	65 kts

Spins:

From the fully stalled position, put on full aileron and rudder (crossed). Keep the stick back. To stop the spin centralize or release one of the controls. Height lost per rotation is approximately 220 ft. The speed reached when levelling out is about 86 kts.

Maximal positive g loading + 5,3.

Manoeuvres that involve negative g loads are prohibited.

Unorthodox manoeuvres are likewise prohibited.

Spinning

With the Center of Gravitiy between 415 mm and 480 mm behind the Datum Line, it is possible to put the glider into a spin from the stalled position. To do so the stick has to be pulled fully back, and the rudder and aileron controls be fully crossed. The nose will then drop in the direction in which rudder is being applied, and with a rearward C. of G. position the glider will rotate in a slow, flat spin.

Recovery from the spin can be effected in any way you choose. With almost all C. of G. positions and wingloadings all that is required is for one of the controls to be released or returned to its normal position. The quickest recovery (without overstressing the glider) can be brought about by centralizing all of the controls.

The height lost in returning to the normal flying position after a single-rotation spin, is about 220 ft.

If the glider fails to stop spinning immediately the controls have been centralised, then the standard method of spin recovery should be employed at once:

1 Full opposite rudder
2 Pause
3 Stick steadily forward
4 When spin stops. centralize controls and resume normal flight

Speed Flying

In speed flying it is quite possible to exceed the maximum permitted speed. At very high air speeds, care should be taken to use only small control movements so as not to overstress the glider:

Dangerous

Escape Procedure

In the event of having to bail out, the following procedure should be followed: –

a) Pull both red knobs back on right and left of canopy surround and with left hand push canopy upwards and backwards.
b) Umbuckle seat harness.
c) EXIT over left or right side.
d) Wait only 1 – 3 secords before pulling the rip cord.

Flying at High Speed

Within the permitted speed range the glider has no tendency towards high speed flutter. The controls need only be used at $^1/_3$ of their full

movement at 93 kts. The air brakes are speed limiting and with them open the glider will only reach about 108 kts even in a 45° dive.

Approach and Landing

The glider can be brought in quite normally at an approach speed of 50 kts. The air-brakes allow a steep approach to be made quite easily. As the action of the brakes makes the glider slightly nose-heavy, the machine will itself maintain the airspeed it is set at when the brakes are opened. The sideslip is quite controllable and, if needed, this manoeuvre can be used to help land the glider.

ATTENTION:

Landing circuit check:	Height 500 ft.
	Airspeed 50 kts.
	WHEEL DOWN AND LOCKED

Flying in the rain

A thin layer of water or ice on the wings leads to no deterioration in the flying characteristics of the glider. With more substantial deposits the stalling speed is increased by about 3 kts, although the way the glider takes off and touches down remains the same. Increase the normal flying speed accordingly.

Cloud-flying

The minimum set of instruments required before cloudflying should be attempted, is: —

A.S.I., Altimeter, Compass, Turn and Slip and Radio

The A.S.I. must have the maximum permitted speed marked on it, i. e. red section.

In order to avoid exceeding the maximum permitted speed, the air-brakes should be opened in good time (i. e. at about 86 kts.)

Warning: Cloud flying and aerobatics should only be carried out by pilots who possess the appropriate authorization. The statutory regulations must be adhered to.

Basic Accessories

1 160 kts. A.S.I.

2 Altimeter

3 Variometer

4 Four piece safety harness
5 Weighted seat cushion at least 2¾", thick, or parachute
6 Loading limitations Chart
7 Flying limitations Placard
8 Flight Manual

Weight and Center of Gravity positions

When the new instruments are added and other changes in the weight of the glider made, the empty weight C. of G. position should be checked. If the limits of the empty weight C. of G. positions and the Loading Limitations Chart are adhered to, then the C. of G. of the loaded glider will lie within the permitted range.

Empty Weight (lbs)	Range of C. of G. positions (mm behind the Datum Line)
539	697 – 756
550	690 – 750
561	683 – 745
572	675 – 740
583	654 – 735
594	633 – 730
605	612 – 726 24 – 28.5 INS
616	593 – 721
627	574 – 717

Measurements

Position of the glider whilst taking all measurements:
with a 1000:40 Incidence Board set up horizontal on the top of the rear fuselage.

Elevator	upwards	2.36 ± 0.23 in	60 ± 6 mm
	downwards	2.13 ± 0.23 in	54 ± 6 mm
Rudder	left	7.48 ± 0.39 in	190 ± 10 mm
	right	7.48 ± 0.39 in	190 ± 10 mm
Aileron	upwards	3.66 ± 0.39 in	93 ± 10 mm
	downwards	1.89 ± 0.20 in	48 ± 5 mm

Angles: between the center line of the wing and the longitudinal axis of the fuselage 2°
between the cord of the tail-plane and the longitudinal axis of the fuselage 0°

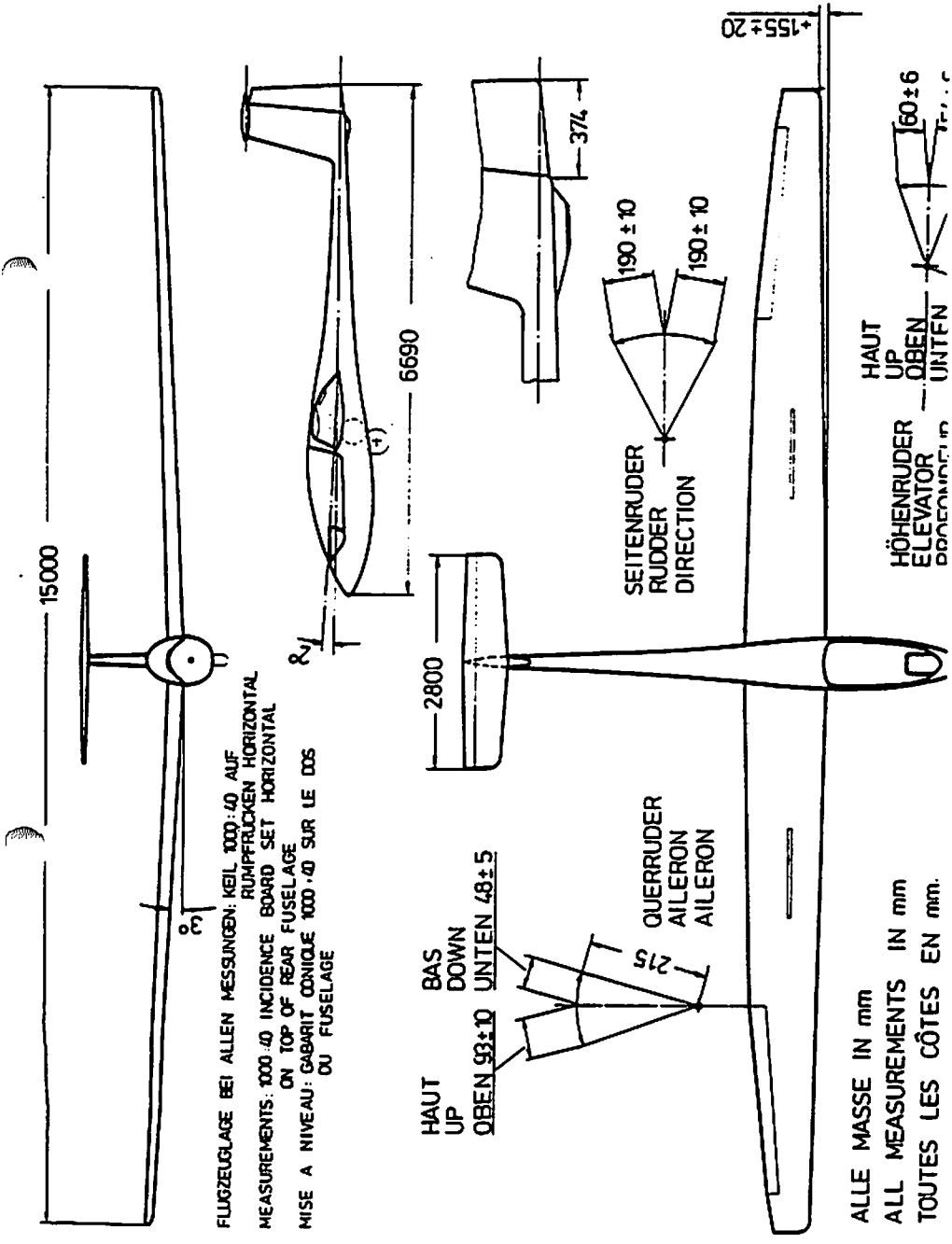
15000
FLUGZEUGLAGE BEI ALLEN MESSUNGEN: KEIL 1000:40 AUF RUMPFRÜCKEN HORIZONTAL
MEASUREMENTS: 1000:40 INCIDENCE BOARD SET HORIZONTAL ON TOP OF REAR FUSELAGE
MISE A NIVEAU: GABARIT CONIQUE 1000:40 SUR LE DOS DU FUSELAGE
6690
374
2800
190 ± 10
190 ± 10
SEITENRUDER
RUDDER
DIRECTION
+155 ± 20
60 ± 6
HAUT
UP
OBEN
UNTEN
HÖHENRUDER
ELEVATOR
HAUT
UP
OBEN 93 ± 10
BAS
DOWN
UNTEN 48 ± 5
215
QUERRUDER
AILERON
AILERON
ALLE MASSE IN mm
ALL MEASUREMENTS IN mm
TOUTES LES CÔTES EN mm.

Performance		350 kp	450
Best Glide Angle		37,3 — 95	38 — 105 km
Minimum Sink	(meter. sec)	0,6 — 75	0,7 — 85 km.
Circling speed		80 — 85	90 — 95 km.

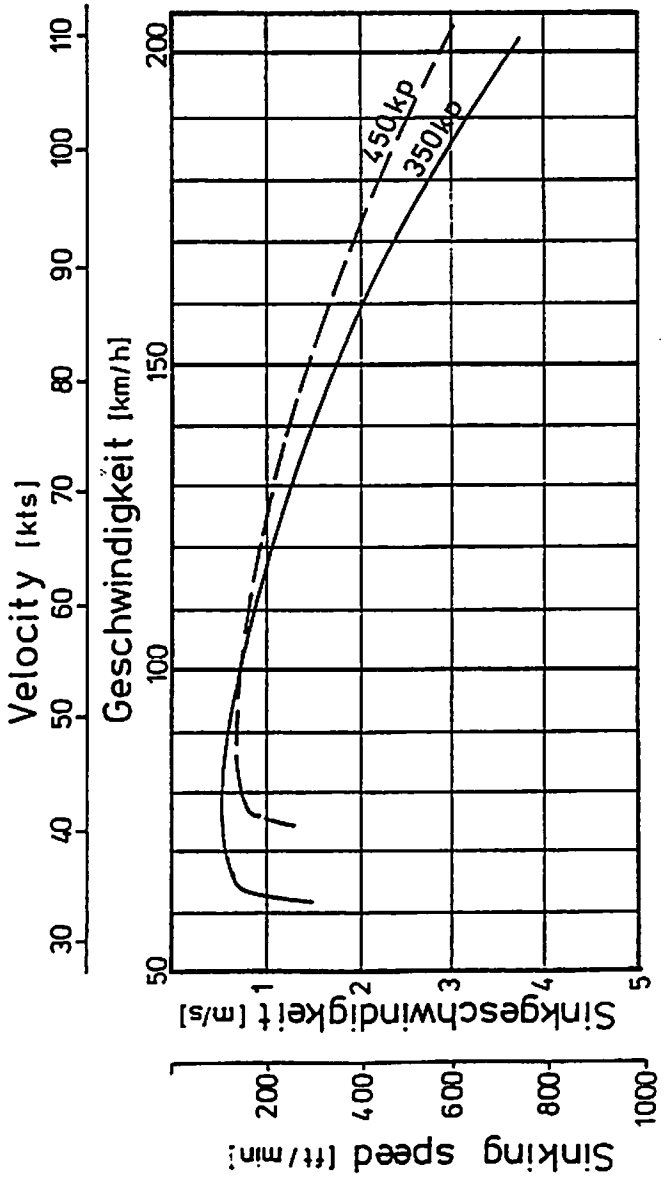

Geschwindigkeitspolare ASTIR CS
Flight Polar

Weights

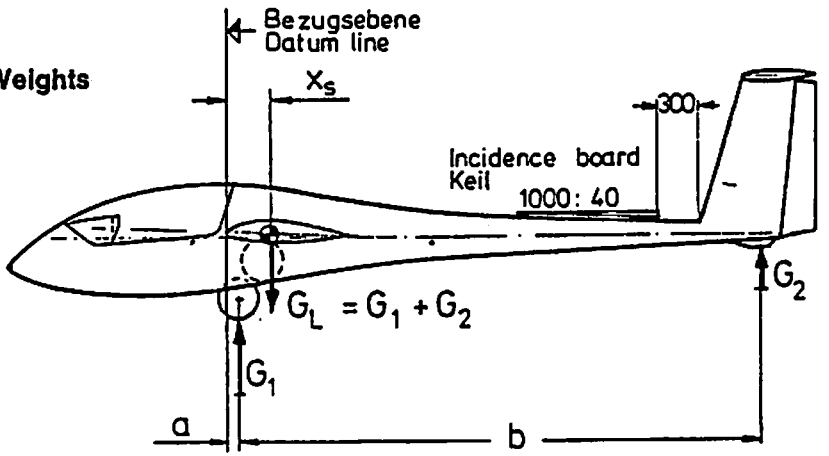

Datum Line: Front edge of the wing at the root

Levelling means: With a 1000:40 Incidence Board set up horizontal on the top of the rear fuselage.

Weight on main-wheel	G_1 =		lbs
Weight on tail-skid	G_2 =		lbs
Empty Weight G_L	= G_1 + G_2 =		lbs
Displacement of main-wheel	a =		mm
Deplacement of tail-skid	b =		mm

Empty Weight C. of G.

$$X = \frac{G_2 \times b}{G_L} + a = \frac{\quad}{\quad} + = \quad \text{mm behind Datum Line}$$

Maximum Load $G = 836 - G_L$ = lbs

The measurements to determine the empty weight, the empty weight C. of G., and the loading limitations should always be taken with the glider empty of waterballast.

VI. Weights and moments of the control surfaces

The weights and the moments of the control surfaces must not exceed the following values:

ASTIR CS (Serial No. 1002 – 1536)

Elevator	12,0 cm kg ± 10%	2,7 kg ± 10%
Rudder	13,65 cm kg ± 10%	3,2 kg ± 10%
Aileron	16,0 cm kg ± 12%	4,1 kg ± 12%

ASTIR CS 77 (Serial No. 1601 – 1698)
ASTIR CS JEANS (Serial No. 2001 – 2092)

Elevator	12.0 cm kg ± 10%	2.7 kg ± 10%
Rudder	16.5 cm kg ± 10%	4.5 kg ± 10%
Aileron	16.0 cm kg ± 12%	4.1 kg ± 12%

ASTIR CS 77 (from Serial No. 1699)
ASTIR CS JEANS (from Serial No. 2093)

Elevator	12.0 cm kg ± 10%	2.7 kg ± 10%
Rudder	0–5 cm kg	max. 6 kg
Aileron	0–1 cm kg	max. 6 kg

The moments must be measured with the control surfaces removed. To determine the moment M = P.r the surface should be mounted at the hinge line with the minimum friction possible. The force P can be measured, for example, using a letter scale. If these values are exceeded the mass balance should be increased. Before carrying out repairs which for example involve charging the mass balance on a surface the manufacturer or his repair agent should be consulted.

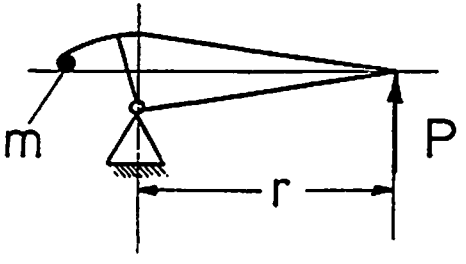

Assembly

It is possible to rig the glider with three people.

1. Wings:

   Open the 4 main wing fittings in the fuselage. Unlock the air-brakes on the wings. Guide the right wing into the fuselage. The safety catches on the fuselage sockets will be released, and on gently moving the wing to and fro will be heard to snap into place. Next guide the left wing into the fuselage. Move the wing tips up and down so that the pin on each spar stub is located in the appropriate hole in the opposite wing root. Next the catches on the left-hand fuselage sockets should be released, and by moving the wing backwards and forwards they too can be made to snap into place. To ensure that the wing-fuselage joint is safely secured, turn the socket catches towards the bayonets until they drop into place.

Checks

The red circles on the fuselage sides must be covered by the rotated sockets.

2. The aileron and brake-connections lie behind the spar.

   The short connecting rods in the fuselage are fitted with quick-action locks which must be coupled up to the knobs of the push-rods that move inside the wings.

   After rigging, the connecting rods should be examined to check that pins are properly inserted, and project some mm out of the locks.

   After coupling the quick action locks, check that the ball can not be extracted, by twisting the lock back and forth. Do this gently with not more than 10 lbs pull. Check all control connecting rods and locks in a methodical order.

After rigging the following check must be carried out to check the connections are secure:

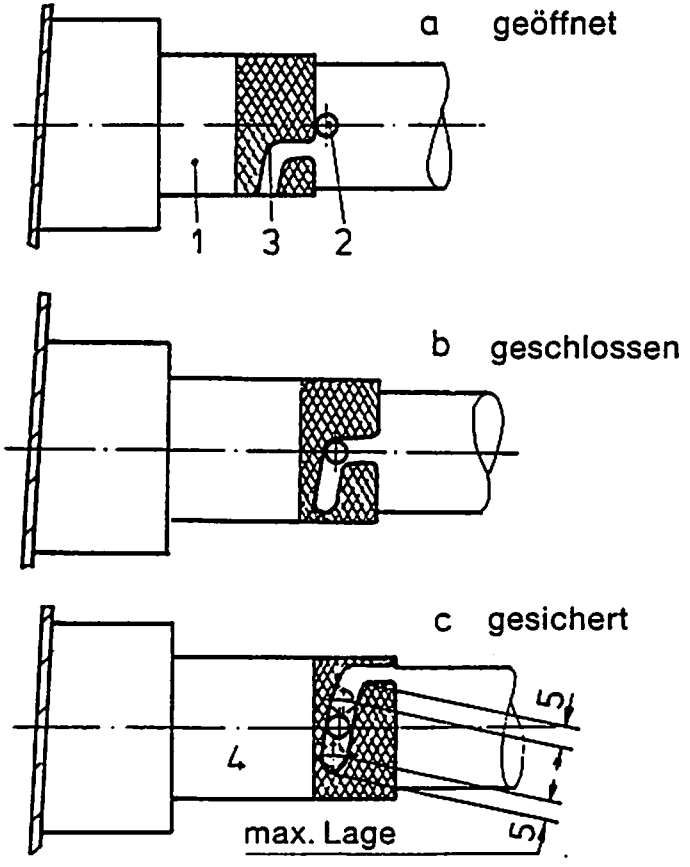

After connecting the quick lock couplings make a visual check that the collar is extended forward over the bearing far enough for the safety pin to engage.

3. Tailplane:

Before assembly is commenced the front cover must be removed and the rotating knob pulled out to the limit. The tailplane can then be positioned by one person, who should stand behind the rudder. The tailplane can be rested on the top of the fin with the elevator angled upwards, so that the snap-lock fastener on the elevator push-rod can be attached to the ball on the elevator. The front auf the tailplane can then be lowered and pushed back into three pins. It is then necessary to turn the knob to the right to conclude installation. The assembly is complete when the knob is turned so far that there is no play in any direction. The cover provides a safety measure as it can only be attached with the knob in the horizontal position. If necessary the knob has to be turned 1/4 turn to suit. Disassembly is carried out in the reverse order and the knob is turned to the left and pulled.

Checks to be made after assembly

1 Check that the 4 main wing fittings are locked.
2 Check that aileron and brake quick-action locks are properly located on the knobs.
3 Ensure that the tow hook is functioning correctly.
4 Test the operation of the wheelbrake and the pressure of the air in the tire.
5 Check that the tailplane is securely seated and that the elevator push-rod is connected.
6 Rudder movement.

Pre-Launch checks

1 Do all the controls move freely?
2 Are the air-brakes locked?
3 Is the undercarriage control lever in the most forward position and is it pushed in flush with the fuselage-wall?
4 Is the trimmer set at neutral?
5 Is the canopy locked?
6 Are the parachute and seat straps drawn in tight and secured?
7 Is the altimeter set to ZERO or the height of the airfield?
8 Is the radio turned on and set to the frequency being used by the airfield control?

Inspection of the airbrake locking lever

At the daily check the right- and lefthand airbrake locking levers have to be checked through the inspection openings in the wing underside.
The lever are made of aluminium casting and have a facilitating hole. The following instruction has to be carried out: Inspection of the airbrake locking levers for cracks in one of the 3 legs.
For a better inspection the plexiglass-pane can be removed for easier access. The use of a magnifying glass is recommended.
If cracks are found, the exchange of the locking levers left- and righthand no. 102-4123/4124 of aluminium casting for such of aluminium sheet (see TM 306-26) is required.
If the aluminium sheet's are installed, the daily check is not longer applicable.

Anerkannt vom
Luftfahrt-Bundesamt
25. April 1985

25.03.1985 (TM 306-26)

Maintenance

The greatest care should be taken in maintaining the **fibre glass surface** of the glider. Luke warm water should be used to wash off dust, grease, dead flies and other dirty marks. More resistant dirt should be removed by using a mild cleaning agent. Only special silicon-free preparations should be used in maintaining the painted surfaces. Cracks should be carefully filled.

Although very resistant the glider should be protected as much as possible against **rain and dampness.** Water that has seeped-in should be dealt with by storing the glider in a dry place, frequently turning over the dismantled parts.

The most effective way to clean the **canopy** is to use a special perspex cleaner, but if necessary luke warm water can be used. A soft, clean cloth or chamois-leather should be employed to wipe the canopy down. Never rub perspex with anything dry.

The Safety harness should be regularly checked for mildew and general wear and tear. The metal parts of the harness should be frequently checked for rust.

Because of its position in the wheel cavity **the tow-hook** is susceptible to getting very grimy and muddy. It must therefore be frequently inspected for damage, cleaned and greased. When the seat-well is removed the hook can easily be taken out. Remove the connecting wire from the lever and take out two retaining screws. For reconditioning the tow hook should be sent with the record card to the tow hook manufacturer, Tost.

The main wheel **tire pressure** should be kept at 2½ atmospheres (36 psi).

The wheelbrake is of the drum type. If required the point at which the brake begins to drag can be adjusted. The adjustment is carried out by moving the Bowden cable at the drum end.

When **the main wheel is being taken off** for the purpose of cleaning, greasing or changing the tyre, the Bowden cable should be disconnected from the brake-lever. Screw the M 6 threaded special tool onto one side of the axle and take out the screws and the spindle. Remove the screws that hold the brake-lever in place. Take the wheel out by pulling it downwards. Clean all the parts and before re-assembly smear all of them with grease.

Before assembling the glider **the pins and sockets** at the joints between wings and fuselage, and tailplane and fuselage, should be cleanded and greased.

If **repairs** are carried out on the glider which are more extensive than normal maintenance work, the manufacturers should be contaced.

It is absolutely essential to ensure that if the glider is **re-painted** all surfaces which are directly exposed to the sun's rays should be painted **WHITE.**

When any repairs are done or a fresh coat of paint added the position of the empty weight C. of G. must be re-checked.

Maintenance on Hotellier quick-locks must be conducted during each annual inspection or 500 hours which ever occurs first. They are installed at the control-connections of aileron and airbrakes at the wing-fuselage joint and at the elevator connection to the pushrod.

The diameter of the swivel has to be measured at different points by a micrometer with no differences in excess of 0,1 mm (0,004 in.) that means the swivel must still be spheric. If there are large differences the swivels and appropriate joints must be replaced.

Swivels and joints should be greased prior to each rigging.

The use of additional safety-pins guided through the holes of the wedge-type slides increases safety. (safety-pins No. 500 3771 from A. Würth, D - 7118 Künzelsau, W.-Germany or manufacturer)

Inspection Procedures For Increase of Service Time

1. **General**

   The results of fatigue tests of wingspar sections have demonstrated recently that the service time of FRP gliders and motorgliders may be extended to 6000 hours, if for each individual glider (in addition to the obligatory annual inspections) the airworthiness is demonstrated according to a special multi-step inspection programm particularly with regard to the service life.

2. **Dates**

   When the glider has reached a service time of 3000 hours, an inspection must be done in accordance with the inspection program mentioned under point 3. If the results of this inspection are positive or if any defects found have been duly repaired, the service time of the glider is extended by another 1000 hours to a total of 4000 hours (first step).

   The above inspection program must be repeated when the glider has reached a service time of 4000 hours. If the results of this inspection are positive or if any defects found have been duly repaired, the service time of the glider is extended to 5000 hours (second step).

   When the glider has reached a service time of 5000 hours, the above inspection program again must be repeated. If the results of the inspection are still positive or if any defects found have been duly repaired, the service time may be extended to a total of 6000 hours (third step).

   For a possible service time exceeding 6000 hours procedures will be evaluated in the future.

3. In each case the latest issue of the inspection program which will be updated according to incoming inspection results, has to be ordered from the manufacturer.

4. The inspection must only be done by the manufacturer or by a licensed repair station or inspector.

5. The results of the inscections have to be recorded in an inspection test report wherein comments are required for each inspection instruction. If the inspections are done outside the manufacturer's facilities, a copy of the records must be sent to the manufacturer for his evaluation and information.

6. The annual inspection is not affected by this inspection program.